Datasheet | OP-CR-ACC | Alta Access

# Avigilon Access Control Core

## Expandable access control for the modern workplace

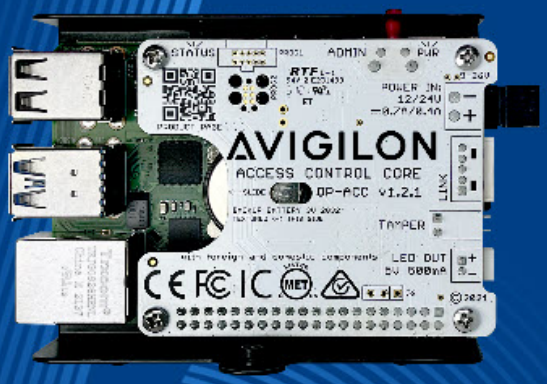


Alta access combines sleek hardware with an app, enabling employees to enter the building using their smartphone. This Avigilon Access Control Core works with expansion boards to securely make all entry decisions. Take advantage of Alta's touchless access control, fast and reliable Triple Unlock and seamless installation. The Access Control Core stores all cloud configuration locally in order to remain fully functional in the event of an Internet outage. It natively supports up to 16 entries by connecting up to two Avigilon expansion boards via USB, or up to 32 entries by connecting to Mercury MP or LP Series intelligent controllers. This offers maximum flexibility for your security needs, backed by a lifetime warranty for complete peace of mind.

### 100% remote cloud management

Do more with less by securely and easily connecting to the cloud for remote system management, diagnostics, and communication.

### Easy management with smart monitoring

Network and device monitoring systems built in to ensure a smooth experience for our users, with remote diagnostic and troubleshooting capabilities to resolve any issues with ease.

### Simplified installation

Supports wireless configuration via the Alta Access mobile app using Bluetooth with interoperability to integrate with physical on-premise systems and logical software-based systems.

### Premium hardware for best performance

The Access Control Core features a next generation hardware platform with faster processing speeds, more RAM, and better support for our 64-bit operating system and future capabilities.

### Lifetime limited warranty

Avigilon's access control hardware is backed by a limited lifetime warranty, helping ensure lasting quality.

MOTOROLA SOLUTIONS

# Specifications

| SYSTEM | | |
|---|---|---|
| Access Control | Capacity | Expansion Board Connections |
| | Up to 8 entries<br>Up to 12 entries<br>Up to 16 entries | 2 Avigilon 4-Port Expansion Boards<br>1 Avigilon 4-Port Expansion Board and 1 Avigilon 8-Port Expansion Board<br>2 Avigilon 8-Port Expansion Boards |
| | Up to 64 inputs | 2 Avigilon 32-Input Expansion Boards |
| | Up to 8 entries<br>Up to 32 entries | 1 Mercury™ MP Series or LP Series Intelligent Controller - MP1501 or LP1501<br>1 Mercury MP Series or LP Series Intelligent Controller - MP1502, MP2500, LP1502, or LP2500 |
| Communications | 10/100/1000 baseT Ethernet port for connection to access control cloud service<br>TLS 1.2+ encryption between Access Control Core and access control cloud service<br>2 USB 2.0 ports and 2 USB 3.0 ports for expansion board connections | |
| Backup Battery | CR2032 3V, replace every two years | |
| Tamper Input | Connects to tamper switch to detect opening of enclosure | |
| LED Output | Future use | |

| MECHANICAL | |
|---|---|
| Dimensions | Access Control Core (OP-CR-ACC):<br> 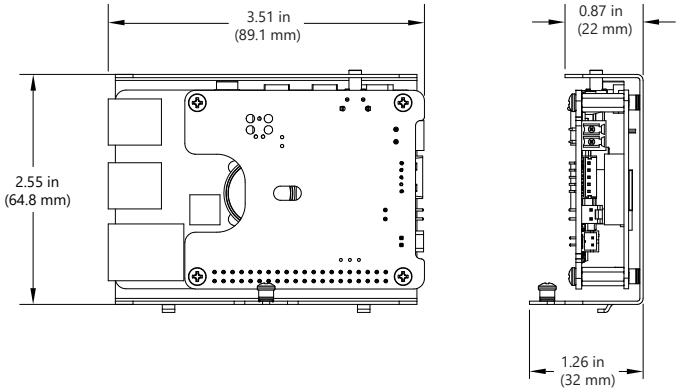 <br> |
| | Mounting bracket (included):<br>Recommended in SYS-4ENT-DVE1, SYS-8ENT-DVE2, SYS-SENS-SVE1,and SYS-ELEV-SVE1 Smart Hub models<br>Required in SYS-8ENT-DVE4, SYS-16ENT-DVE6, and SYS-8ENT-DVR1 Smart Hub models<br> 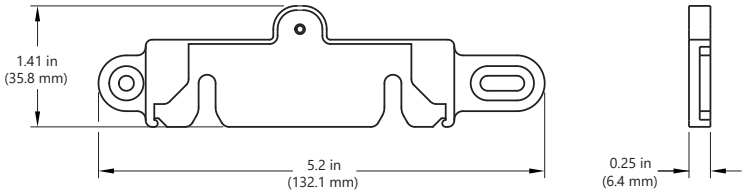 <br> |

| MECHANICAL (CONT.) | |
|---|---|
| | Mercury board adapter bracket (ordered separately; OP-CRA-ACC-ADPT):<br>For mounting Access Control Core on MP1501, LP1501, MP1502, LP1502, MP2500, and LP2500 boards<br> 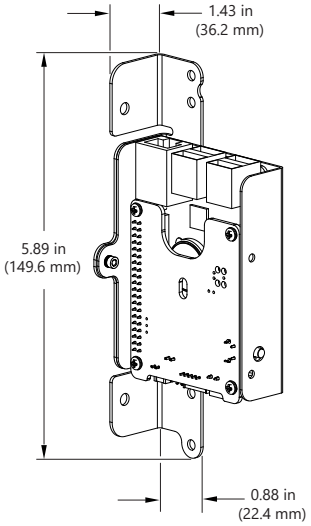 <br> |
| Weight (Device Only) | Access Control Core: 2 oz (57 g) |

| ELECTRICAL | |
|---|---|
| Operating Voltage | 12-24VDC |
| Operating Current | 0.7A @ 12VDC<br>0.4A @ 24VDC |

| ENVIRONMENTAL | |
|---|---|
| Operating Temperature | 0° to 50°C (32° to 122°F) |
| Operating Humidity | 5% to 85% relative, non-condensing |

| REGULATORY | |
|---|---|
| Certifications | CE (Europe), ISED (Canada), FCC (United States), RoHS, UKCA (United Kingdom), ANATEL (Brazil) |

| WARRANTY | |
|---|---|
| Avigilon Alta Access Warranty | Lifetime limited; for more information, visit avigilon.com/support/warranty |

# Ordering information

| PART NUMBER | DESCRIPTION |
|---|---|
| OP-CR-ACC | Avigilon Access Control Core |
| OP-CRA-ACC-ADPT | Mercury Adapter Bracket for Access Control Core |

# Support

For product support, visit: avigilon.com or sales@avigilon.com

To learn more, visit:
**avigilon.com/access-control/access-control-core-board-op-acc**

MOTOROLA SOLUTIONS

Motorola Solutions, Inc. 500 West Monroe Street, Chicago, IL 60661 U.S.A. motorolasolutions.com

© 2026, Motorola Solutions. All rights reserved. MOTOROLA, MOTO, MOTOROLA SOLUTIONS and the Stylized M Logo are trademarks or registered trademarks of Motorola Trademark Holdings, LLC and are used under license. All other trademarks are the property of their respective owners.

20260428-en

Rev 1