Datasheet | OP-R2X-EMBD | Alta Access

Avigilon Embedded USB Smart Reader

Expandable access control for the modern workplace

The Avigilon Embedded USB Smart Reader can be used as a compact-sized reader for entry access or connected to a workstation for use as a desktop enrollment reader. As an entry reader, it can be installed in a single gang box, embedded into a wall, or placed inside turnstiles or elevator panels. The optional desktop stand provides easy access for card scanning when used as an enrollment reader. This multi-technology reader supports mobile credentials, and low (125 kHz) and high (13.56 MHz) frequency RFID credentials.

Small size, many uses

Snap-off brackets support multiple mounting applications, and the small size fits in turnstiles, elevators, kiosks and other embedded uses. USB port supports desktop enrollment reader applications.

Fast, reliable mobile access

Patented Triple Unlock with Bluetooth, WiFi and cellular data ensures reliable unlocks with mobile credential options like Wave to Unlock, Apple Wallet, or the Alta Open app for mobile or smart watch. Readers also support physical cards and fobs.

Easy monitoring and management

Cloud management provides secure, remote access and eliminates the need to set up or maintain local servers. Get real-time visibility and insights to access events from anywhere.

Enhanced security

Readers store no data, and encrypted end-to-end communication and strong public-key cryptography keep everything protected.

Seamless provisioning

Integrations with identity service providers, like Okta, Microsoft Active Directory and Google, to streamline end-user roll out when used with mobile credential provisioning. Supports remote unlocking with user-level privileges.

Lifetime limited warranty

Avigilon's access control hardware is backed by a limited lifetime warranty, helping ensure lasting quality.

MOTOROLA SOLUTIONS

Specifications

OPERATING MODES	
Selectable Modes*	Smart Reader mode for use in Avigilon Access Control systems (RS-485 only)
	Enrollment Reader mode to scan access cards into a system (USB only)

*Reader cannot be used as a Smart Reader and enrollment reader at the same time.

CREDENTIAL COMPATIBILITY	
Avigilon Alta Mobile Credential	Triple Unlock technology: Bluetooth® Low Energy Auto Proximity Unlock Wave to Unlock
	Alta Open mobile app supported on iOS and Android™-compatible devices
Avigilon Alta Mobile Wallet Credential*	Apple Wallet
High-Frequency (13.56 MHz) Card and Fob**	MIFARE Classic, DESFire®, Ultralight (ISO14443A) CSN
Low-Frequency (125 kHz) Card and Fob**	HID® Proximity™, ProxCard®, LenelProx®

* This integration is available in the Alta Access App marketplace and requires a purchased license.
** Ordered separately.
The Bluetooth® word mark and logos are registered trademarks owned by Bluetooth SIG, Inc. and any use of such marks by Motorola Solutions, Inc. is under license.

GENERAL	
LED Indicators	Reader power on or off, user access granted or denied, entry or door locked or unlocked, provisioning and connection status to access control system
Wiring	RS-485 to connect to Avigilon expansion boards Wiegand inputs for third-party devices Pigtail Length: 12 in (305 mm) Encryption to access control cloud service uses TLS 1.2+
Power	0.5A @ 5VDC (USB operation only) 0.25A @ 12VDC 0.12A @ 24VDC

DIMENSIONS	
Device Only	**Installation Types** **1** Architectural application Install within kiosks, turnstiles, parking systems, or other enclosures using the mounting holes **a** **2** Flush mount in US gang box **3** Mount behind panels using adhesive strips in the recommended mounting strip location **b** **4** Desktop mount for use as enrollment reader using the mounting holes **a**

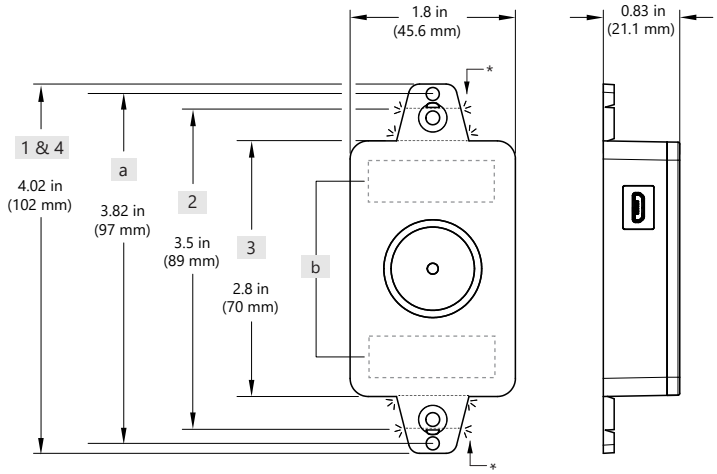

*Remove breakaway tabs carefully using pliers.

DIMENSIONS (OP-R2X-EMBD)	
Optional Desktop Bracket	**4** (continued)
Weight	0.235 lb (107 g)

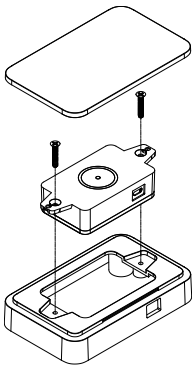

For desktop enrollment reader mode:

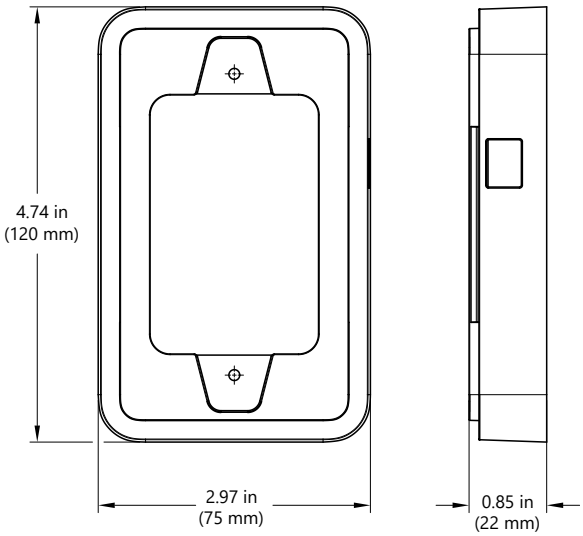

(ordered separately)

ENVIRONMENTAL	
Temperature	Operating Temperature: -30°C (-22°F) to 60°C (140°F)
Humidity	Operating Humidity: 5% to 85% relative, non-condensing
IP Rating	Indoor and Outdoor: IP65 (IEC 60529)

Operating temperature must not be exceeded.

REGULATORY	
Certifications	FCC (United States), ISED (Canada), CE (Europe), UKCA (United Kingdom), NOM (Mexico), BIS (India), RCM (Australia, New Zealand), ANATEL (Brazil), UL 294*, RoHS, CAN/ULC 60839-11-1 *Performance Levels: Attack Level I, Endurance Level I, Line Security Level I, Standby Power Level I
Compliance	NDAA, TAA

WARRANTY	
Avigilon Alta Access Warranty	Lifetime limited; for more information, visit avigilon.com/support/warranty

Ordering information

PART NUMBER	DESCRIPTION
OP-R2X-EMBD	Avigilon Embedded USB Smart Reader
OP-RSC-DESK	Desktop Bracket for Embedded USB Smart Reader installed as enrollment reader
OP-ACH, OP-ACL, OP-KFH, OP-KFL	Avigilon Keycards and Fobs*

* See docs.avigilon.com/bundle/avigilon-keycards-fobs-datasheet.

Support

For product support, visit: avigilon.com or sales@avigilon.com

To learn more, visit:
avigilon.com/access-control/embedded-usb-smart-reader

MOTOROLA SOLUTIONS

Motorola Solutions, Inc. 500 West Monroe Street, Chicago, IL 60661 U.S.A. motorolasolutions.com

© 2026, Motorola Solutions, Inc.. All rights reserved. MOTOROLA, MOTO, MOTOROLA SOLUTIONS and the Stylized M Logo are trademarks or registered trademarks of Motorola Trademark Holdings, LLC and are used under license. All other trademarks are the property of their respective owners.

20260904-en

Rev 1