Datasheet | OP-RKP-STND | OP-RKP-MULL | Alta Access

Avigilon Smart Keypad Readers

Expandable access control for the modern workplace

The Avigilon Smart Keypad Readers revolutionize PIN code access. Available in a Standard and Mullion form factor, Avigilon Smart Keypad Readers are designed for ease of use for both credentialed users and visitors. Built to last, the durable, capacitive touch keypad prevents spoofing, and the multi-technology, cloud-based device allows remote unlock and PIN-activated lockdown. Avigilon Smart Keypad Readers work seamlessly with the cloud-native Alta Access providing visibility and management from anywhere.

Streamlined installation

Sleek form factor is easy to mount and install with standard electric wiring. Flexible mounting options to suit a variety of deployment needs, indoors and out.

Fast, reliable mobile unlocks

Patented Triple Unlock with Bluetooth, WiFi and cellular data ensures reliable unlocks with mobile credential options like Wave to Unlock, Apple Wallet, or the Alta Open app for mobile or smart watch.

Flexible access options

Built-in keypad for multi-factor authentication with a PIN combined with any number of credentials, including mobile, high-frequency and low-frequency keycards, fobs, and Cloud Key. Or, use the keypad to provide PIN code access for guests.

Protected and fail safe

Tamper resistant, and designed to withstand power failures and internet outages. Readers store no data, and encrypted end-to-end communication and strong public-key cryptography to keep everything protected.

Easy management and monitoring

Software runs in the cloud for easy, secure access and remote monitoring, without the need for local servers. Built-in diagnostics and real-time troubleshooting insights streamline management.

Lifetime limited warranty

Avigilon's access control hardware is backed by a limited lifetime warranty, helping ensure lasting quality.

Specifications

CREDENTIAL COMPATIBILITY	
Avigilon Alta Mobile Credential	Triple Unlock technology: Bluetooth® Low Energy Auto Proximity Unlock Wave to Unlock
	Alta Open mobile app supported on iOS and Android™-compatible devices
Avigilon Alta Mobile Wallet Credential*	Apple Wallet
High-Frequency (13.56 MHz) Card and Fob**	MIFARE Classic, MIFARE DESFire EV1, EV2, EV3, Ultralight (ISO14443A) CSN
Low-Frequency (125 kHz) Card and Fob**	HID® Proximity™, ProxCard®, LenelProx®
Keypad PIN	Supported

* This integration is available in the Alta Access App marketplace and requires a purchased license.
** Ordered separately.
The Bluetooth® word mark and logos are registered trademarks owned by Bluetooth SIG, Inc. and any use of such marks by Motorola Solutions, Inc. is under license.

GENERAL	
LED Indicators	Reader power on or off, user access granted or denied, entry or door locked or unlocked, provisioning and connection status to access control system
Wiring	RS-485 to connect to Avigilon expansion boards and Wiegand inputs for third-party devices Pigtail Length: 12 in (305 mm) Encryption to access control cloud service uses TLS 1.2+
Power	0.25A @ 12VDC 0.12A @ 24VDC

DIMENSIONS	OP-RKP-STND	OP-RKP-MULL
Device Only	With surface mount bracket* 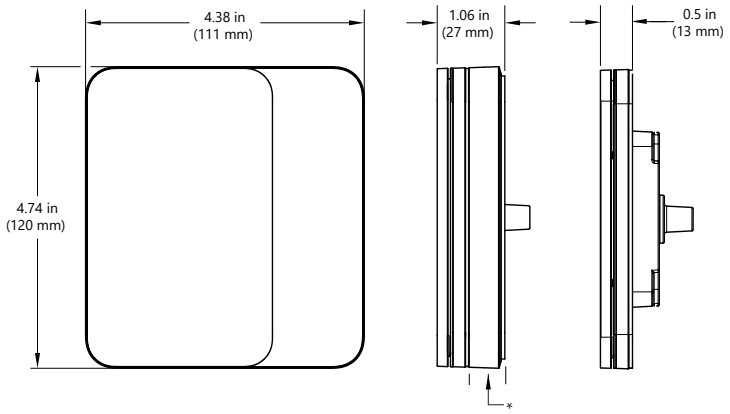	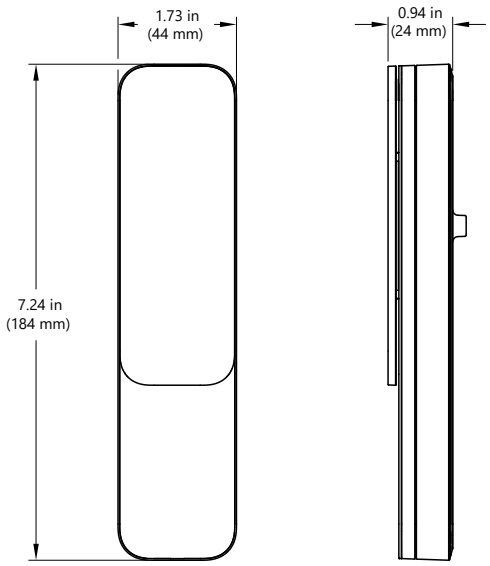

DIMENSIONS	OP-RKP-STND	OP-RKP-MULL
Included Surface Bracket	Surface mount on wall using the bracket and one of these options: • Drywall • EU or UK single gang box 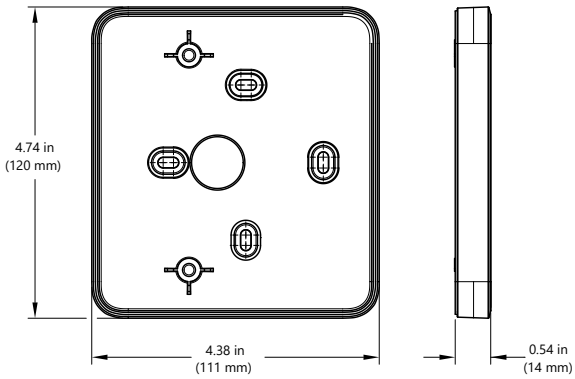	None
Weight	0.685 lb (311 g)	0.475 lb (215 g)

ENVIRONMENTAL	
Temperature	Operating Temperature: -30°C (-22°F) to 60°C (140°F)
Humidity	Operating Humidity: 5% to 85% relative, non-condensing
IP Rating	Indoor and Outdoor: IP65 (IEC 60529)

Operating temperature must not be exceeded.

REGULATORY	
Certifications	FCC (United States), ISED (Canada), CE (Europe), UKCA (United Kingdom), NOM (Mexico), BIS (India), RCM (Australia, New Zealand), ANATEL (Brazil), UL 294*, RoHS, CAN/ULC 60839-11-1 *Performance Levels: Attack Level I, Endurance Level I, Line Security Level I, Standby Power Level I
Compliance	NDAA, TAA

WARRANTY	
Avigilon Alta Access Warranty	Lifetime limited; for more information, visit avigilon.com/support/warranty

Ordering information

PART NUMBER	DESCRIPTION
OP-RKP-MULL	Avigilon Smart Keypad Reader - Mullion Form Factor - Black
OP-RKP-STND	Avigilon Smart Keypad Reader - Standard Form Factor - Black
OP-ACH, OP-ACL, OP-KFH, OP-KFL	Avigilon Keycards and Fobs*

* See docs.avigilon.com/bundle/avigilon-keycards-fobs-datasheet.

Support

For product support, visit: avigilon.com or sales@avigilon.com

To learn more, visit:
avigilon.com/access-control/keypad-reader-standard and
avigilon.com/access-control/keypad-reader-mullion

Motorola Solutions, Inc. 500 West Monroe Street, Chicago, IL 60661 U.S.A. motorolasolutions.com

© 2026, Motorola Solutions, Inc.. All rights reserved. MOTOROLA, MOTO, MOTOROLA SOLUTIONS and the Stylized M Logo are trademarks or registered trademarks of Motorola Trademark Holdings, LLC and are used under license. All other trademarks are the property of their respective owners.

20260904-en

Rev 1