Datasheet | OP-VID-PRO-RDR | Alta Access

Avigilon Video Reader Pro

Expandable access control for the modern workplace

The Avigilon Video Reader Pro combines video security and access control into a single device with a modern, mullion form factor. Designed to enhance security with increased visibility at exterior entries, the Video Reader Pro is ideal for securing employee entrances, back doors and parking garages, or high-security areas like IT closets. Associate video footage with access events, and monitor entries in Alta Access. The Video Reader Pro is a multi-technology reader that supports both low (125 kHz) and high (13.56 MHz) frequency RFID credentials.

Flexible, easy install

Easily install via a single Ethernet cable for power and connectivity. A Wiegand Input/Output can be used to connect to existing legacy systems, no subscription or internet required.

Seamless provisioning

Integrations with identity service providers, like Okta, Microsoft Active Directory and Google, to streamline end-user roll out when used with mobile credential provisioning.

Increase visibility, improve security

Associate video with access events or alerts and monitor entries from the Alta Access mobile app or Alta Access on your computer to validate activity. Reader height and adjustable camera angle ensures optimal view of person entering.

Fast, reliable mobile access

Patented Triple Unlock with Bluetooth, WiFi and cellular data ensures reliable unlocks with mobile credential options like Wave to Unlock, Apple Wallet, or the Alta Open app for mobile or smart watch.

Easy management and monitoring

Software runs in the cloud for easy, secure access and remote monitoring, without the need for local servers. Built-in diagnostics and real-time troubleshooting insights streamline management.

Secure and fail safe

Tamper-resistant design, with a built-in accelerometer to alert on physical tampering events. The reader features encrypted end-to-end communication and strong public-key cryptography to keep everything protected.

Specifications

MODEL: OP-VID-PRO-RDR		
Camera	Camera Resolution	5MP (2592 x 1944)
	Recording Rate	25 fps
	Privacy Areas and Regions of Interest	Yes
	Video Compression	H.264, MJPEG
	Night Mode	Infrared light for night vision
		IR range: 9m (29.53ft)
	Field of View	Horizontal: 109° Vertical: 81° Diagonal: 136°
	Image Sensor	1/2.5” 5MP CMOS
	Bit Rate	CBR, VBR, MBR
	Min. Illumination	Color: 2.5 lux B/W: 0.0 lux (IR LED on)
	Focal Length	2.8mm (F1.6)
	Anti-overexposure	Yes
	Wide Dynamic Range	HDR (87dB)
Video Recording	Motion Detection	Detects activity and starts recording
	Onboard Video Storage	10GB eMMC for network failover recording
	Cloud Video Storage	30, 60, 90, and 180 day plans available
Other	QR Code Support*	Capable of reading and forwarding QR codes to third-party systems

*Enterprise or Premium subscription is required.

CREDENTIAL COMPATIBILITY	
Avigilon Alta Mobile Credential	Bluetooth LE Auto Proximity Unlock Wave to Unlock
	Alta Open mobile app supported on iOS and Android™-compatible devices
Avigilon Alta Mobile Wallet Credential*	Apple Wallet

CREDENTIAL COMPATIBILITY	
High-Frequency (13.56 MHz) Card and Fob	MIFARE Classic, DESFire®, Ultralight (ISO14443A) CSN
Low-Frequency (125 kHz) Card and Fob	HID® Proximity™, ProxCard®, LenelProx®

* This integration is available in the Alta Access App marketplace and requires a purchased license.

GENERAL	
LED Indicators	Video Reader Pro power on or off, user access granted or denied, entry or door locked or unlocked, provisioning and connection status to access control system
Wiring	Ethernet for network connection **Note:** The Pro series reader does not require a controller, however, a Smart Hub is required to support locking hardware.
Communications	TLS 1.2+ encryption between Video Reader Pro and access control cloud service
Tamper	Accelerometer sensor to detect tamper events
Power	802.3af PoE , 7.8W power consumption

DIMENSIONS	
Device Only	With cradle bracket*
Weight	0.63 lbs (287 g)

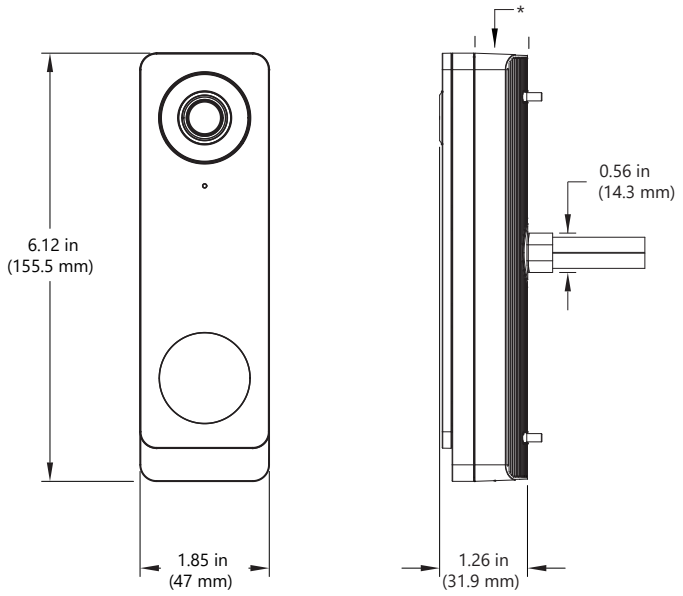

DIMENSIONS		
Mounting Plate	Surface mount on wall	Standard mount on wall with US gang-box

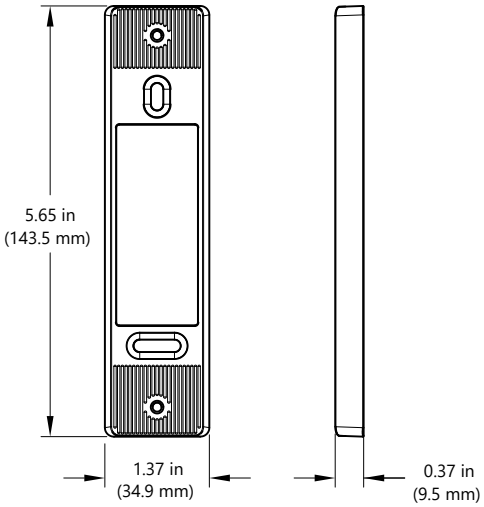

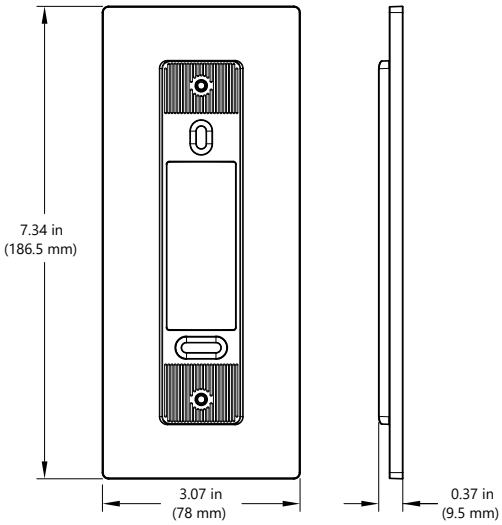

ENVIRONMENTAL	
Temperature	Operating Temperature: -40°C (-40°F) to 50°C (122°F); Cold start -25°C (-13°F)
	Storage Temperature: -40°C (-40°F) to 50°C (122°F)
Humidity	Operating Humidity: Up to 90% RH non-condensing
IP Rating	IP Rating: Indoor and outdoor IP65 (IEC 60529)

Operating temperature must not be exceeded.

REGULATORY	
Certifications	FCC (United States), CE (Europe), ISED (Canada), UKCA (United Kingdom), NOM (Mexico), RCM (Australia, New Zealand), BIS (India), ANATEL (Brazil), UL 294*, CAN/ULC 60839-11-1 *Performance Levels: Attack Level I, Endurance Level I, Line Security Level I, Standby Power Level I
Compliance	NDAA, TAA

WARRANTY	
Avigilon Alta Access Warranty	5 years; for more information, visit avigilon.com/support/warranty

Ordering information

PART NUMBER	DESCRIPTION
OP-VID-PRO-RDR	Avigilon Video Reader Pro
OP-ACH, OP-ACL, OP-KFH, OP-KFL	Avigilon Keycards and Fobs*

* See docs.avigilon.com/bundle/avigilon-keycards-fobs-datasheet

Support

For product support, visit: avigilon.com or sales@avigilon.com

To learn more, visit:
avigilon.com/access-control/video-reader-pro

MOTOROLA SOLUTIONS

Motorola Solutions, Inc. 500 West Monroe Street, Chicago, IL 60661 U.S.A. motorolasolutions.com

© 2026, Avigilon Corporation. All rights reserved. MOTOROLA, MOTO, MOTOROLA SOLUTIONS and the Stylized M Logo are trademarks or registered trademarks of Motorola Trademark Holdings, LLC and are used under license. All other trademarks are the property of their respective owners.

20260220-en